BAABS

Blasting Accessories & Assist Bracket System

BAABS Short Rail Assembly w/ Pneumatic G3 Trigger Deadman & Adjustable Brace

BAABS Long Rail Assembly w/ Electric G3 Trigger Deadman & Adjustable Brace

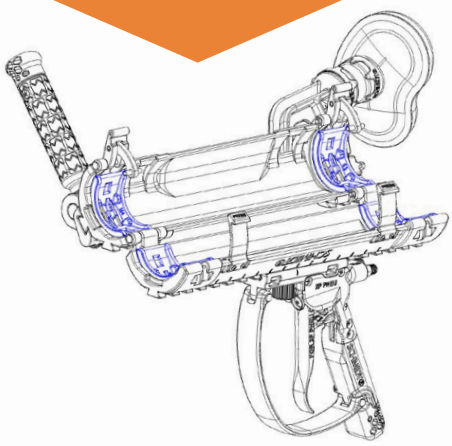

Exchangeable Blast Hose Grippers fits most brands of blast hoses on the market

A rigidly mounted conventional deadman forces blasters into less-than-ideal arm and body grip positions, which are physically demanding and challenging to sustain. These uncomfortable and straining positions quickly cause operator fatigue, resulting in reduced blasting productivity and possible safety issues. BAABS (Blasting Accessories and Assist Bracket System) was conceptualized to address these widely accepted limitations. By changing the deadman grip size and placement and redirecting most of the blast nozzle thrust onto anchored parts of the body, BAABS significantly reduces the overall physical demand on blasters. In addition, the easy-to-install clamshell-style rail was designed to swivel around the blast hose. These features combine to dramatically reduce grip and arm fatigue, thus enabling longer continuous blasting durations or more nozzle on time per workday and better focus on controlling the blast pattern. The resulting benefits are improved safety and greater productivity.

BAABS now comes in four rail configurations: the long, short, NEW compact long, and NEW compact short. All come with the NEW adjustable brace system. Standard long and short BAABS can fit over 1”, 1-1/4”, 1-1/2” thick wall blast hose. The compact long and short BAABS are designed to fit over 3/4” and 1” thick wall blast hoses. As a rule of thumb, the longer rail provides more comfort, particularly when blasting with blast nozzles larger than #7. Conversely, the smaller and shorter rails will better accommodate blasting within tight space

RESPONSE AND RELIABILITY

- System includes the G3 Trigger Deadman, which shares time-proven components with the Schmidt G2 Deadman to provide improve response and enhance reliability
- Safety flap prevents inadvertent trigger activation until actuated with thumb
- Ergonomically positioned and sized grip along with low trigger force enables sustained continuous blasting duration
- Trigger guard provides additional protection
- Clamshell rails keeps the blast hose straight and prevents the hose from wearing and failing near the operator
- Rails can swivel around the blast hose while maintaining grip
- A redundant self-locking latch ensures the rails stay secure around blast hose
- Rail features on upper and lower bases enable mounting for accessories
- New Adjustable Brace Assembly

FEATURES

- G3 Trigger Deadman Controls - Electric or Pneumatic
- Adjustable Brace Assembly
- Long, Short, Compact Long, or Compact Short rails are available

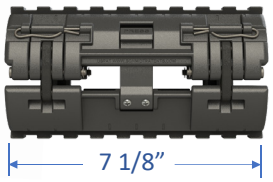

SHORT BAABS

L=12.5”xW=9.563”xH=13.375”Weight= 3.25 lbs

LONG BAABS

L=20” xW=9.563”xH=13.375”Weight=3.75 lbs

US: 1-800-231-2085
Asia: +603-7865 6524
Middle East: +966 (0) 54 698 8889
schmidtmfg.com

A Closer Look

G3 TRIGGER-STYLE DEADMAN CONTROLS

The new Schmidt pneumatic and electric G3 trigger-style deadman controls combine time-tested features and components with innovative design to produce unprecedented ergonomics and provide blasters with the industry's most comfortable remote trigger-style deadman. Designed with real-world abrasive airblast applications in mind, these deadman controls are designed to include the features and benefi ts blasters should have to operate more safely and productively.

- Easy and comfortable to use
- Fast pneumatic response
- It can be reconfigured into pneumatic or electric
- Simple to maintain Promotes operator safety
- Can be installed onto any BAABS rail or directly onto blast hose

ADJUSTABLE BRACE ASSEMBLY

The BAABS brace is designed to direct most of the blast nozzle thrust onto the Thrust Pad, which can be placed on the chest, torso, or any stable parts of the body. This places the bulk of the strength demand directly onto wherever the pad is placed, resulting in less muscle exertion by reducing the strain on the grip and arms to manage the thrust. Clenched grips (hand cramps) and arm fatigue are signifi cantly reduced, enabling the blaster to focus better on controlling the blast pattern. The NEW adjustable brace can quickly be confi gured to left or right-hand without disassembly. In addition, the thrust pad location can be easily adjusted to accommodate varying body types and blast positions.

HOSE GRIPPERS

All four BAABS rail systems come with blast hose grippers. Each half of the rail base houses two grippers that effectively grip the exterior surface of the blast to prevent sliding but allow swivel or rotation around the blast hose. Several sizes of blast hose gripper sets are available to accommodate standard sizes of most brands of blast hoses. Long and Short BAABS can accommodate 1" – 1 1/2" blast hose. Compact long and Compact short BAABS rails can accommodate 3/4" – 1" blast hose. Grippers simply snap into BAABS rails and can easily be replaced.

Available in Electric or Pneumatic

ELECTRIC

PNEUMATIC

Adjustable Brace Assembly

Can be configured for left or right-handed blasting

Blast Hose Gripper

JH NORTON COMPANY INC.
jhnorton.com (757)548-4842
nortonsandblasting.com

© 2026 Schmidt. All rights reserved. Scan the QR code for product, patent, trademark, and legal information.

US: 1-800-231-2085
Asia: +603-7865 6524
Middle East: +966 (0) 54 698 8889
schmidtmfg.com