OPERATING INSTRUCTIONS AND REPLACEMENT PARTS

Models: CO91-14LAC

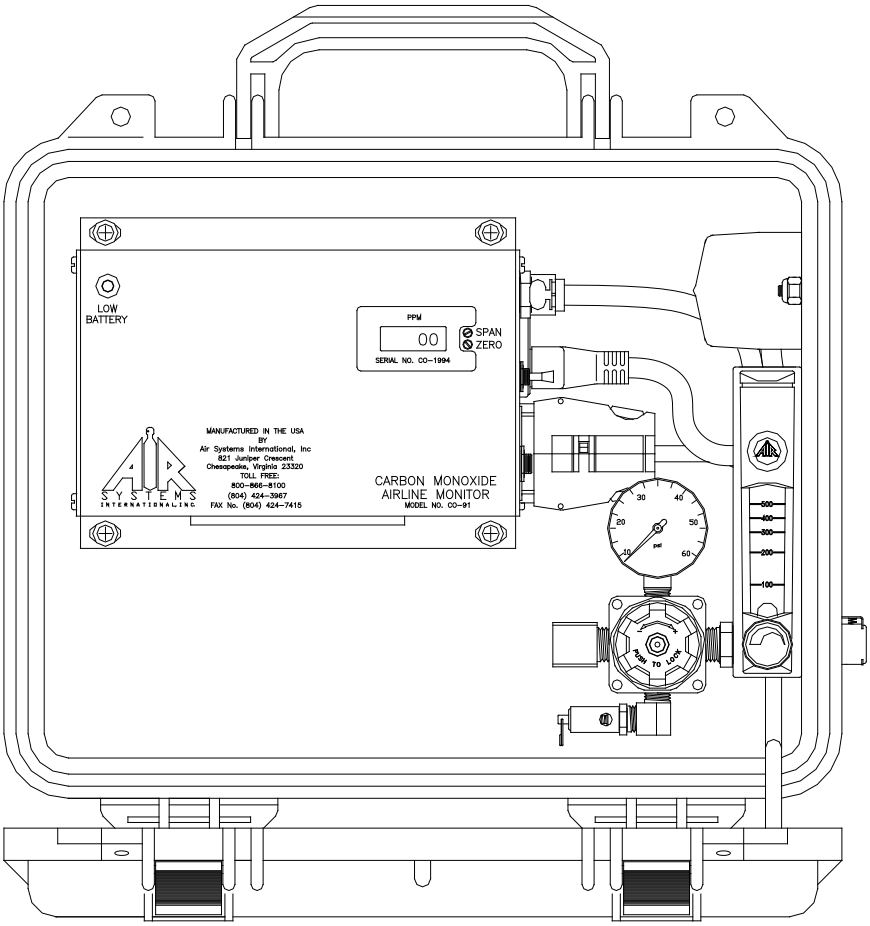

WARNING

This manual must be read carefully and followed by all persons who have or will have the responsibility for using or servicing this equipment. This equipment will perform as designed only if used according to the instructions. Otherwise it could fail to perform as designed, causing personal injury or death.

AIR SYSTEMS INTERNATIONAL, INC.

829 Juniper Crescent, Chesapeake, Va, 23320
Telephone (757) 424-3967
Toll Free 1-800-866-8100
Fax No. (757) 424-5348
www.airsystems.com.
e-mail: sales@airsystems.com

Carbon Monoxide Monitor Overview

The monitor will analyze the air sample and display the CO concentration in parts per million (ppm). The system's green "NORMAL" operation light will illuminate and the red "HIGH CO" light will flicker approximately every second when the CO level is below 10ppm (5ppm Canadian). If the CO concentration level exceeds the alarm set point, the green "NORMAL" light will turn off, the red "HIGH CO" light will illuminate, the audible alarm will sound, and the remote alarm connections will energize. Once the CO concentration levels drop below the alarm set point, all alarm indicators will deactivate and the unit will return to "NORMAL" operation.

Carbon Monoxide Monitor Specifications

Size	2.75"H X 6.57"L X 5.1"W
Weight	2.8 LBS. (1.27kg.)
Case	Extruded Aluminum - anodized black
Voltage	115 VAC and/or 9-16 VDC
Shielding	Internal RFI/EMI filters
Fuse	250 VAC/1 amp fast acting
Operating Temperature	4° to 113° Fahrenheit (-15.5° to 45° Celcius)
Humidity Range	10% to 90% relative humidity
Flow Requirement	50 - 100 cc/min
Display	3 digit LCD CO concentration

Test Circuit	Manually activated
Sensor Type	Sealed electrochemical sensor for Carbon Monoxide
Accuracy	+/-1% full scale
Response	90% in 10-15 seconds
Detectable Range	0-200 ppm CO
Calibration	Manual CO zero and span adjustments
Alarm Setting	10 ppm CO (5 ppm - Canadian)
Warning Signals	Normal operation - Green Light High CO - Red Light High CO - Audible Alarm Low Battery - Amber Light
Warranty	2 years from original date of purchase

System Components

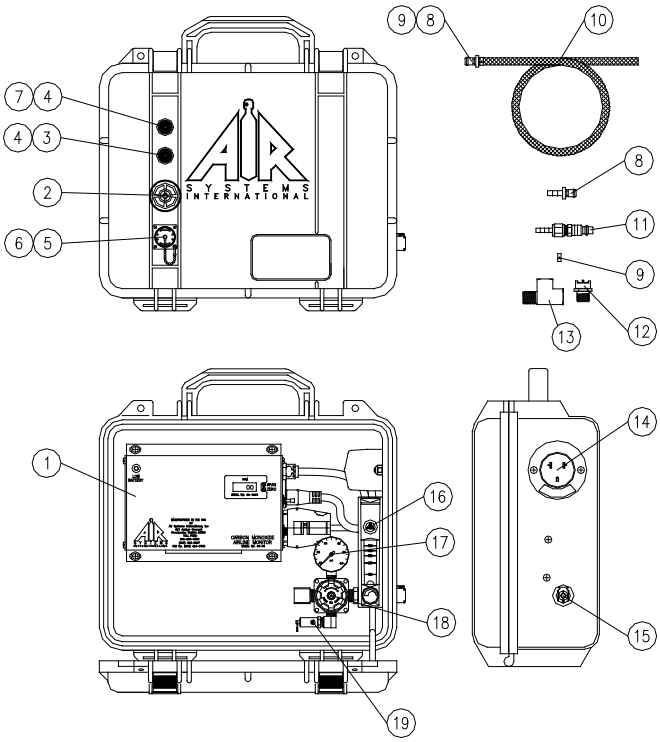

ITEM #	DESCRIPTION	PART #
1	CARBON MONOXIDE MONITOR	CO-91
2	AUDIBLE ALARM	ELLS004
3	RED LED	MONC004
4	CLEAR LENS	ELDS013
5	REMOTE ALARM JACK	ELJP004
6	REMOTE ALARM JACK COVER	ELJP005
7	GREEN LED	MONC005
8	PLUG	MONC002
9	HOSE CLAMP	HOS056
10	AIR SAMPLE HOSE (PER FOOT)	HOS004
11	HANSEN 3000 SERIES PLUG	QDH3PL2M
12	AIR SAMPLE SOCKET	QDCSL4M
13	1/4" STREET TEE	BR4TS
14	120 VAC RECESSED PLUG	ELJP006
15	AIR SAMPLE INLET	QDCSL4M
16	FLOWMETER	WL033NS
17	PRESSURE GAUGE	GA1560S
18	PRESSURE REGULATOR	WL013A
19	RELIEF VALVE	VR2125BR

Set-up/Operation

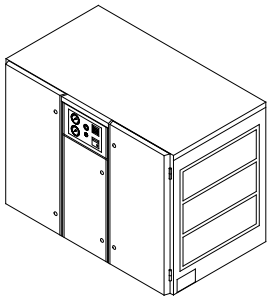

STEP 1)
Secure a low pressure Grade-D air source, under 150 PSI.

STEP 2)
Attach sample hose to the air sample inlet located on the right side of the case and to the air source, 125 PSI max.
Note: A sample hose is provided with two fittings so that a set up for a standard 1/4” fitting or a retrofit for an ambient air pump can be achieved. For an air pump set up, remove the pressure gauge and install a street tee in to the gauge port. Screw the socket into the street tee; this is the connection port for the monitor. Install the quick connect plug on the sample hose and secure with the clamp provided. See page 4.

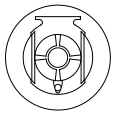

Air Sample Inlet Located On Right Side Of Case

1/4” Industrial Interchange Plug

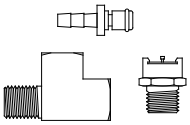

Retro-Fit Kit For Ambient Air Pump

STEP 3)
Adjust the regulator pressure to a maximum reading of 20 PSI.

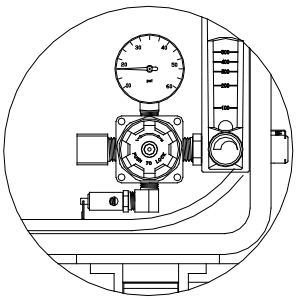

STEP 4)
Adjust the flowmeter so the ball hovers between 50 and 100 cc/min.

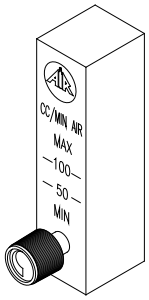

STEP 5)
Place the “ON/OFF/TEST” switch to the “ON” position. Allow 30 seconds for the readout to stabilize. If a reading other than “ZERO” is displayed, calibration of the monitor may be necessary. If the CO concentration level exceeds the alarm set point, the green “NORMAL” light will turn off, the red “HIGH CO” light will illuminate, the audible alarm will sound, and the remote alarm connections will energize. Once the CO concentration level drops below the alarm set point, all alarm indicators will deactivate and the unit will return to “NORMAL” operation.

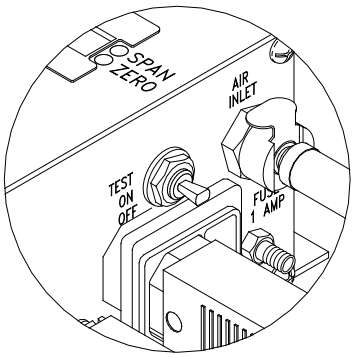

Universal Air Pump Adapter Kit For CO91-14LAC

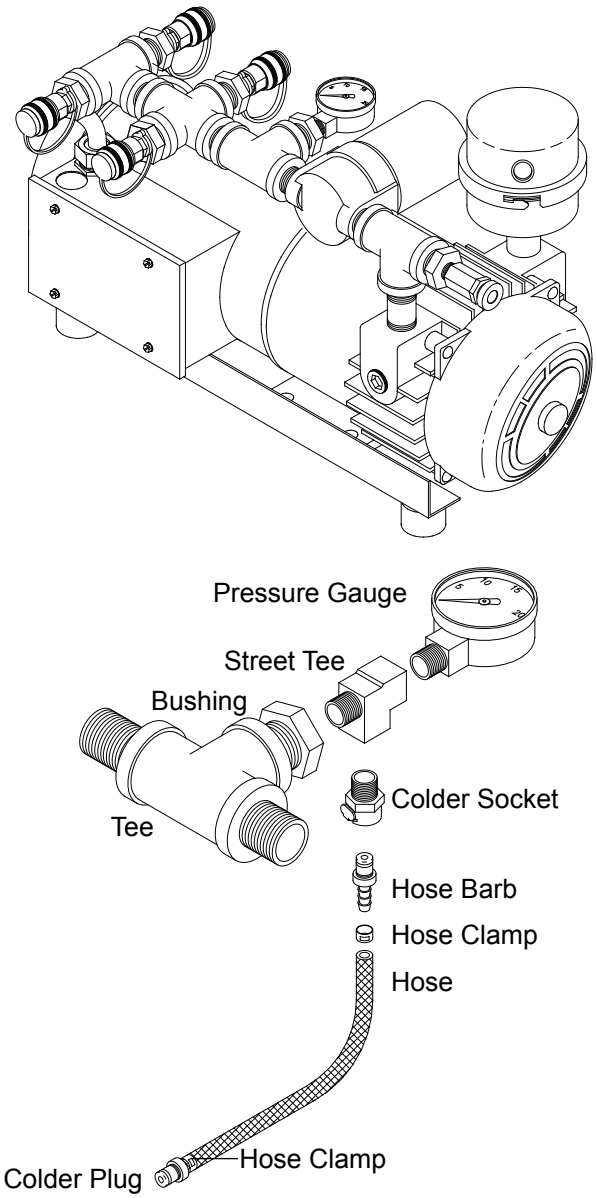

STEP 1
Remove existing gauge from bushing.

STEP 2
Install street tee in bushing. Install colder socket and gauge in street tee as shown.

STEP 3
Slide hose clamp over end of hose. Slide colder plug onto hose and crimp hose clamp over colder plug.

Adapter Hose From L.P. Air Source To CO91-14LAC

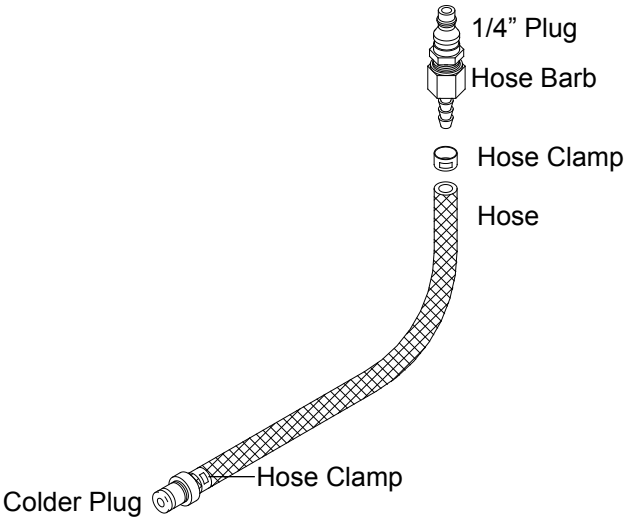

STEP 1
Slide hose clamp over end of hose. Slide 1/2” plug onto hose and crimp hose clamp over hose barb.

STEP 2
Install 1/4” plug on Breather Box™ or other air source to be tested. Maximum pressure 125 PSI.

System Maintenance

Calibration: Monitor calibration should be done monthly or whenever the reading may be questionable. A calibration date sticker should be affixed for future reference. To obtain an accurate calibration, we recommend the use of Air Systems' calibration kits.

Part Number:

BBK-10 Canadian calibration kit for CO monitor; 10ppm CO, zero air, regulator and case - 17 liter size.

BBK-20 Calibration kit for CO monitor; 20ppm CO, zero air, regulator and case - 17 liter size.

BBK-20103 Calibration kit for CO monitor; 20ppm CO, zero air, regulator and case - 103 liter size.

DECAL085CD Calibration decal card, contains 14 calibration decals.

To assure sensor accuracy, calibration of monitor is required. If you cannot obtain an accurate calibration, sensor replacement may be necessary. Consult Repair Service Department before ordering.

Part Number:

CO-91NS Replacement CO sensor

Monitor Battery Replacement

These batteries provide the required continuous bias voltage to the CO sensor and power the monitor in the event of AC power loss. If AC and DC power are removed for a period of 2 hours or more, a 1 hour restabilization period is required as eratic readings may occur.

Battery Replacement: Replace 9 volt batteries when the amber "Low Battery" light illuminates. If the monitor is not used for 90 days, check the 9 volt batteries and replace if necessary.

Carbon Monoxide Monitor System Components

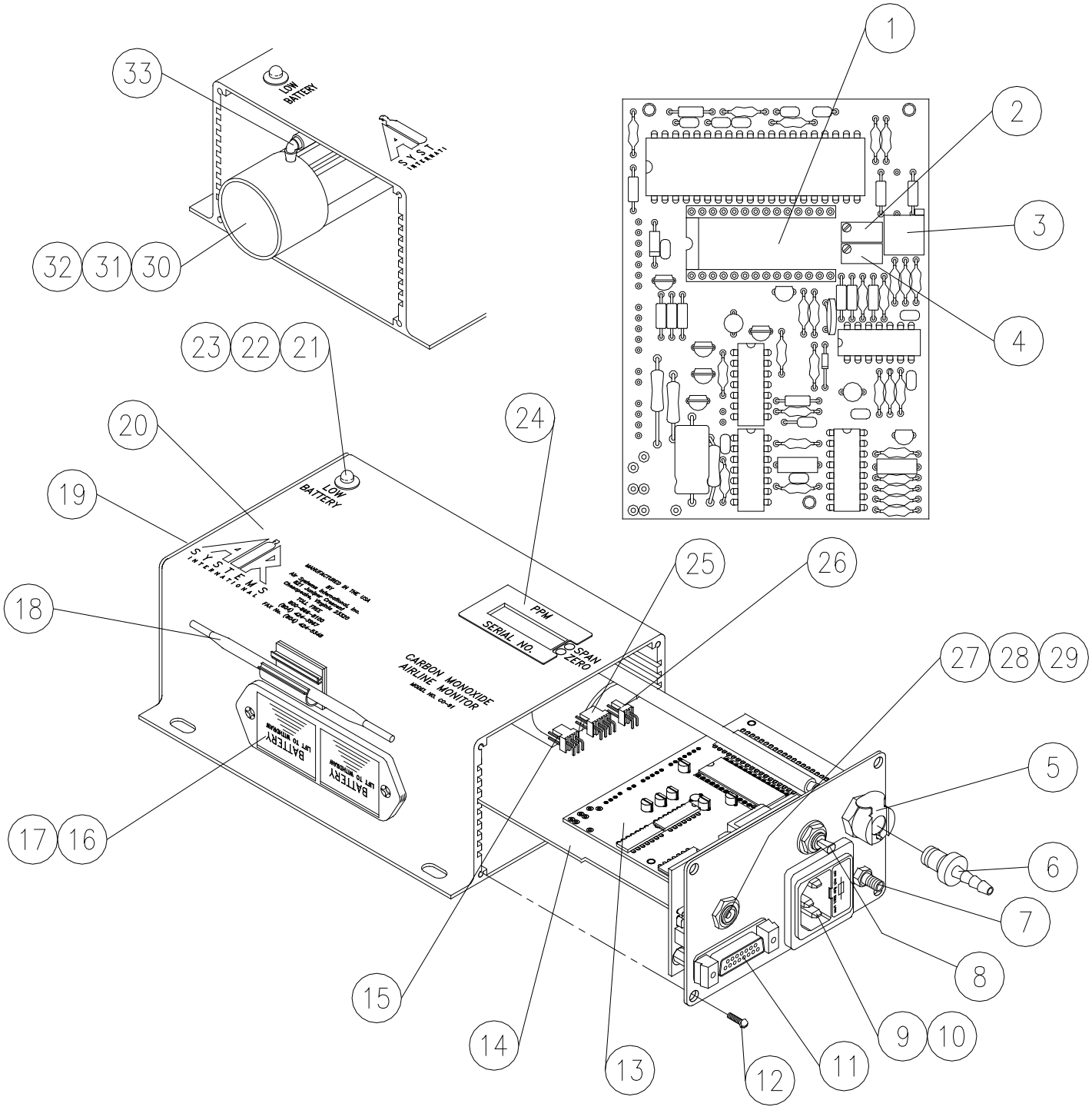

Carbon Monoxide Monitor System Components

ITEM #	DESCRIPTION	PART #
1	LCD Display	MONC703
2	Span Potentiometer	MONC702A
3	Alarm Set Point Potentiometer	MONC702A
4	Zero Potentiometer	MONC702
5	Air Sample Inlet Socket	MONC001
6	Air Sample Plug	MONC002
7	Air Exhaust Port	MONC003
8	On/Off/Test Switch	MONC007
9	Recessed Plug With Fuse Holder	MONC020
10	1 Amp Fast Acting Fuse, 5 X 20Mm	ELF001
11	15 Pin Socket	MONC520
12	Faceplate/Endplate Screw	MONC023
13	Main Circuit Board Assembly	CO-91PCB
14	Power Supply Board	CO-91PSB
15	Sensor Connector (Soldered To PCB)	MONC509
16	Battery Box	MONC006
17	9 Volt Battery	ELB9V
18	Calibration Tool	MONC028
19	End Plate	CO-91BEP
20	Aluminum Housing	CO-91HOU
21	Led Socket	MONC009LA
22	Yellow Led	MONC008NS
23	Led Socket And Yellow Led	CO-91LED
24	PPM/Serial No. Sticker	MONC031
25	Battery Box Connector (Soldered To PCB)	MONC516
26	Led Connector (Soldered To PCB)	MONC511
27	12 VDC Power Socket	MONC522
28	12 Volt Power Plug (Optional)	ELJP018
29	12 Volt Cable (Order By The Foot)	ELCB035
30	CO Sensor	CO-91NS
31	CO Sensor Holder	MONC810
32	CO Sensor Electrical Leads	CO-91SL
33	90° Hose Barb	MONC811

Sensor Replacement

Replacement sensors are shipped with a metal spring installed between the electrodes. Do not remove the clip until the sensor is to be installed into the monitor.

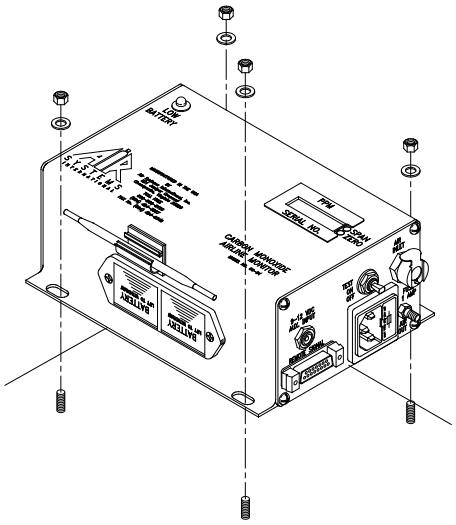

Step 1)
Disconnect all external connections. Remove CO monitor from the unit.

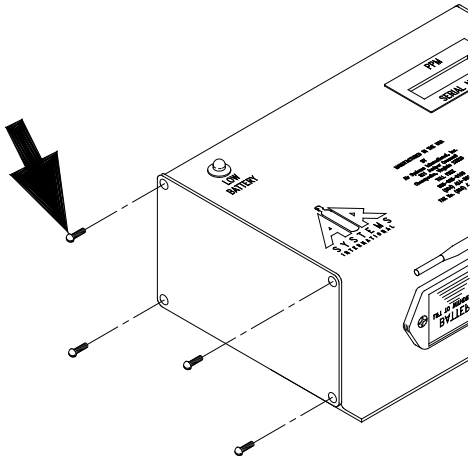

Step 2)
Remove the four screws from the monitor's left endplate.

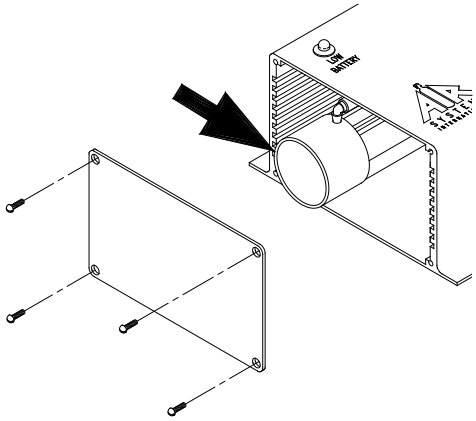

Step 3)
Remove endplate to gain access to the sensor cup.

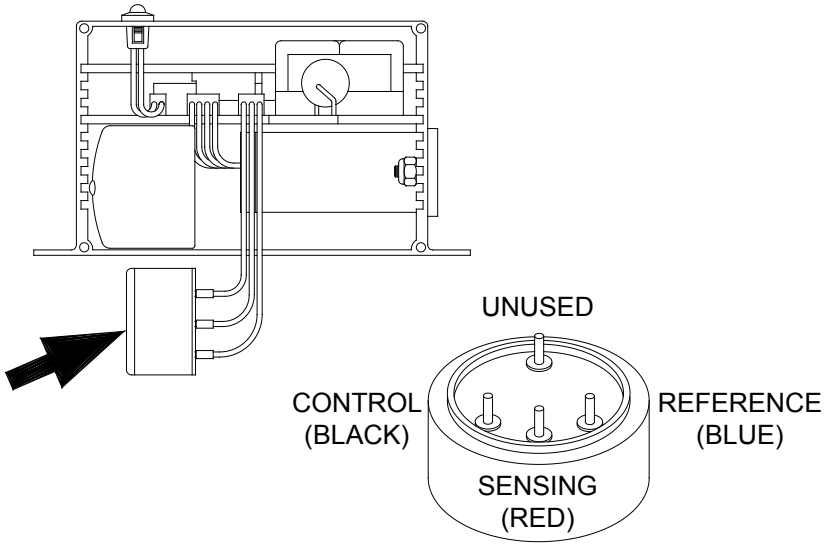

Step 4)
Remove sensor from sensor cup and remove leads. Take the new sensor and remove the metal spring. Reattach leads to the proper colored terminals on the new sensor. Install new sensor into sensor cup.

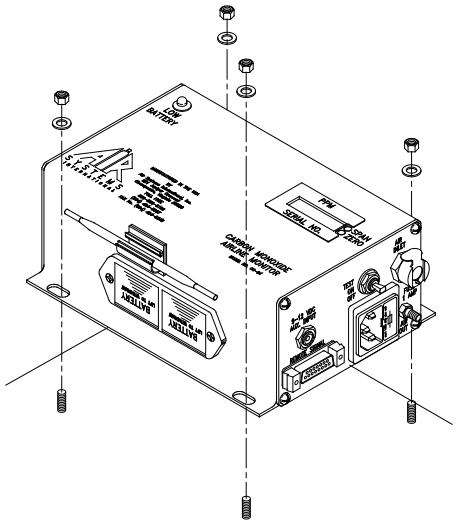

Step 5)
Reassemble monitor and reinstall in unit. Connect all cables and air sample hose. Allow monitor to stabilize 30 minutes to 1 hour and recalibrate.

Calibration Procedure

Do not use inert gases to zero the monitor. This will cause premature failure of the sensor.

CO Monitor Zero Adjustment

To zero the monitor, follow the steps below. Zero calibration gas should be used to properly "zero" the monitor and assure that a valid calibration is achieved. If zero adjustment cannot be made as indicated, sensor replacement may be necessary. ***After each monitor adjustment outlined in the steps, allow time for the changes to stabilize.***

STEP 1)
Place the "ON/OFF/TEST" switch in the "ON" position.

STEP 2)
Allow 30 seconds for the readout to stabilize. The green indicator will illuminate.

STEP 3)
Hold the "ON/OFF/TEST" switch in the "TEST" position. The following will occur:

- Audible alarm will sound
- Green LED will flash
- Amber Low Battery indicator on monitor will illuminate
- Red LED will be on

This test ensures the circuitry is operable and continuity to the sensor is proper. Release the switch.

STEP 4)
Remove the air sample inlet tube.

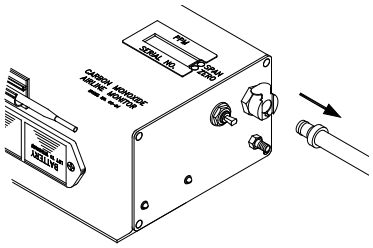

STEP 5)
Install regulator on the zero air cylinder reference gas.

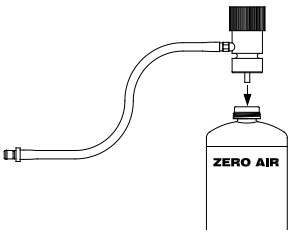

STEP 6)
Turn the knob on the regulator counterclockwise to allow the flow of gas thru the hose. Verify flow of gas thru the hose via touch or sound.

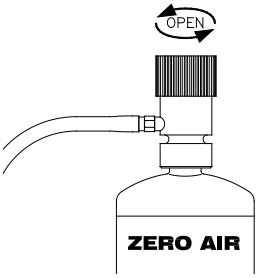

STEP 7)
Attach the clear tubing with the male plug to the air sample inlet on the monitor.

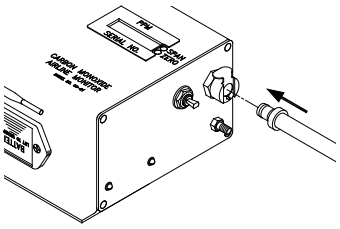

STEP 8)
Allow digital readout to stabilize approximately 15-30 seconds.

STEP 9)
Adjust the "zero" adjustment screw (clockwise to increase or counterclockwise to decrease) until a reading of "00" is obtained.

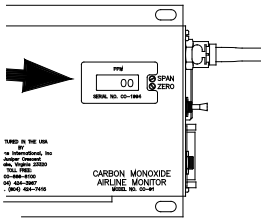

STEP 10)
Turn the regulator off and disconnect the regulator from the zero gas cylinder.

Calibration Procedure

CO Monitor Span Adjustment

Use only 10-20ppm CO gas for calibration. Using a higher concentration may decrease accuracy at lower scale readings. Note: 10ppm gas must be used to satisfy Canadian calibration requirements.

STEP 1)
Install regulator on the CO calibration gas cylinder.

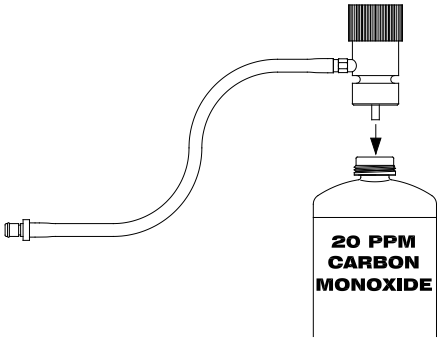

STEP 2)
Turn the knob on the regulator counterclockwise to allow the flow of gas thru the hose. Verify flow of gas thru the hose via touch or sound.

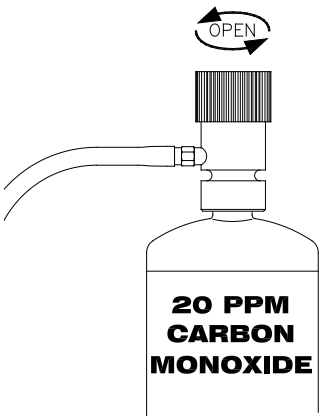

STEP 3)
Connect the plug to the air sample inlet on the monitor.

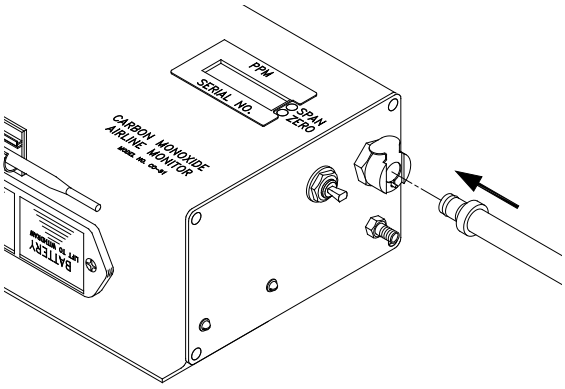

STEP 4)
Allow digital readout to stabilize 15-30 seconds.

STEP 5)
Adjust the “span” adjustment screw (clockwise to increase or counterclockwise to decrease) until the digital readout reads the same as the concentration (ppm) as printed on the calibration gas cylinder.

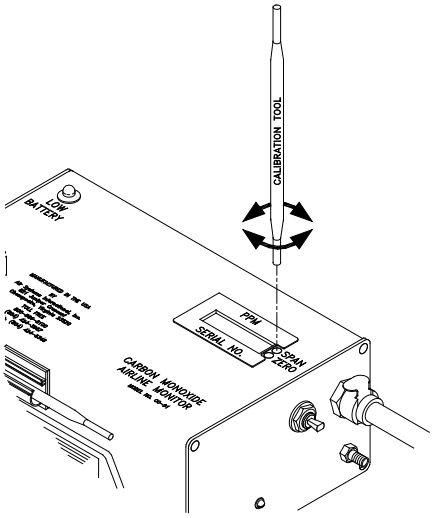

STEP 6)
Turn the regulator off and repeat the “zero” adjustment procedure. The digital readout should return to a “00” reading.

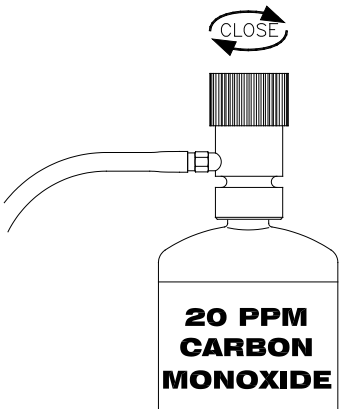

The monitor is now calibrated and should be recalibrated monthly or if accuracy is questionable. Check local requirements and recalibrate as required.

Warranty

Air Systems' manufactured equipment is warranted to the original user against defects in workmanship or materials under normal use for one year from the date of purchase. Any part which is determined by Air Systems to be defective in material or workmanship will be, as the exclusive remedy, repaired or replaced at Air Systems' option. This warranty does not apply to electrical systems or electronic components. Electrical parts are warranted, to the original user, for 90 days from the date of sale. During the warranty period, electrical components will be repaired or replaced at Air Systems' option.

NO OTHER WARRANTY, EXPRESSED OR IMPLIED, AS TO DESCRIPTION, QUALITY, MERCHANTABILITY, FITNESS FOR A PARTICULAR PURPOSE, OR ANY OTHER MATTER IS GIVEN BY AIR SYSTEMS IN CONNECTION HEREWITH. UNDER NO CIRCUMSTANCES SHALL THE SELLER BE LIABLE FOR LOSS OF PROFITS, ANY OTHER DIRECT OR INDIRECT COSTS, EXPENSES, LOSSES, OR DAMAGES ARISING OUT OF DEFECTS IN, OR FAILURE OF THE PRODUCT OR ANY PART THEREOF.

The purchaser shall be solely responsible for compliance with all applicable Federal, State and Local OSHA and/or MSHA requirements. Although Air Systems International believes that its products, if operated and maintained as shipped from the factory and in accordance with our "operations manual", conform to OSHA and/or MSHA requirements, there are no implied or expressed warranties of such compliance extending beyond the limited warranty described herein. Product designs and specifications are subject to change without notice. Rev. 2, 12/98

Air leaks are not covered under warranty except when they result from a defective system component, i.e. an on/off valve or regulator or upon initial delivery due to poor workmanship. Air leaks due to poor delivery or damage will be covered under delivery claims. Minor air leaks are part of routine service and maintenance and are the responsibility of the customer just as are filters and oil changes.

Manual No. MON006
Rev. 6 May 2018

AIR SYSTEMS INTERNATIONAL, INC.
829 Juniper Crescent, Chesapeake, Va, 23320
Telephone (757) 424-3967
Toll Free 1-800-866-8100
Fax No. (757) 424-5348
http://www.airsystems.com
e-mail: sales@airsystems.com

Printed in the U.S.A. ©Copyright Air Systems International, Inc. 2018 All Rights Reserved